general specification

DAE Systems
2421 Bga Drive · Claremont, NC 28610
(828) 548-3192 · (714) 540-1000
www.daesyst.com · cs@daesyst.com

MODEL: MF454B-45A MIXED FLOW FAN

FEATURES

MOTOR MODEL:	BM28607IF
MOTOR TYPE:	CLOSED
INPUT POWER:	28 V.D.C.
SPEED:	12,450 RPM
THERMAL PROTECTOR:	YES
EMI FILTER:	YES
HOUSING:	ALUMINUM ALLOY
FINISH:	ANODIZE WITH WHITE EPOXY POLYAMIDE TOPCOAT
PROPELLER:	ALUMINUM ALLOY WITH ANODIZE
SPECIAL FEATURES:	

PHYSICAL CHARACTERISTICS

WEIGHT:	9.0 LBS.
NOISE:	71 dBA

TYPICAL APPLICATIONS

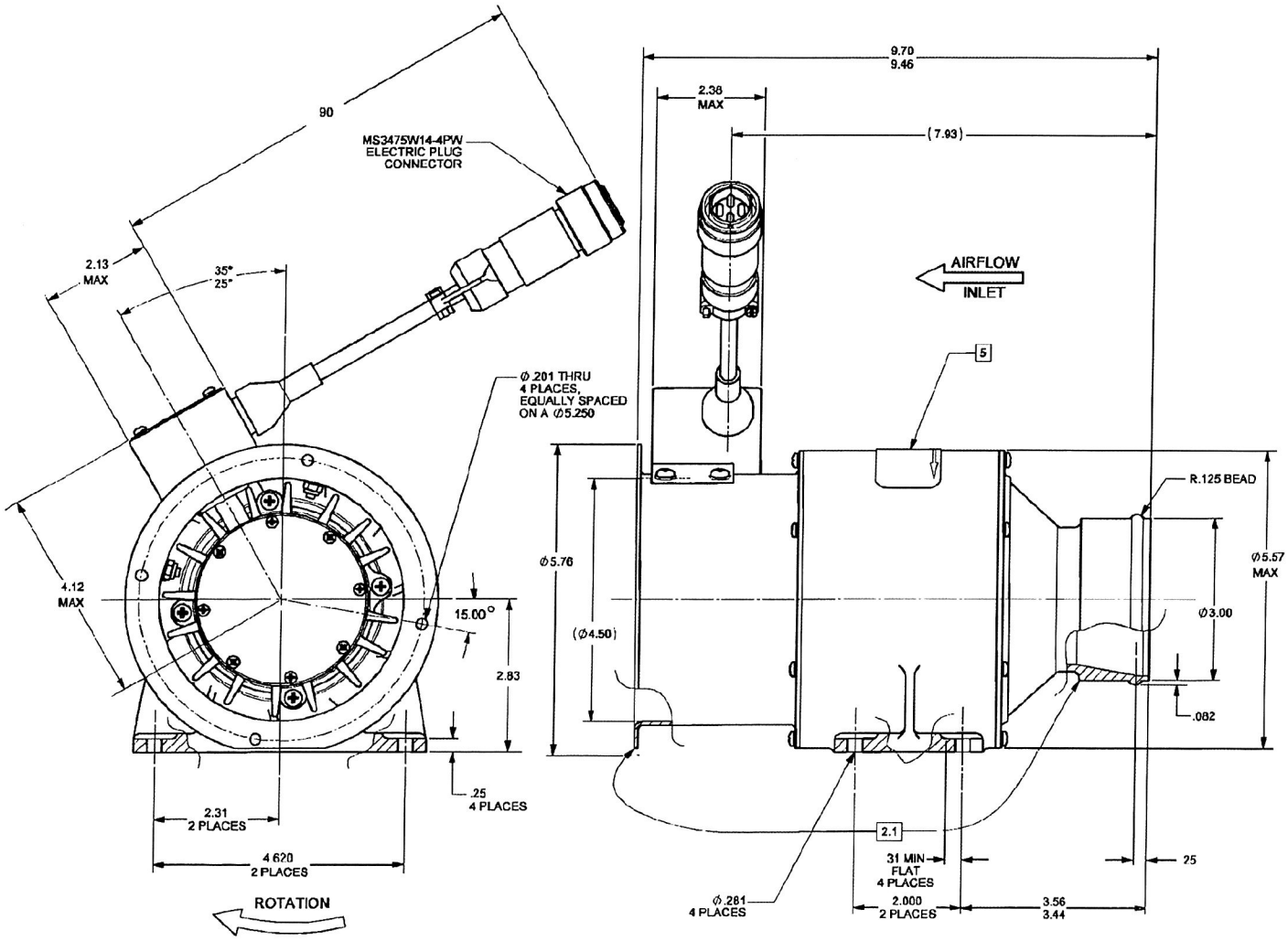

OUTLINE DRAWING: L6461 PERFORMANCE CURVE: X454-45-5 DATE: 10/25/06

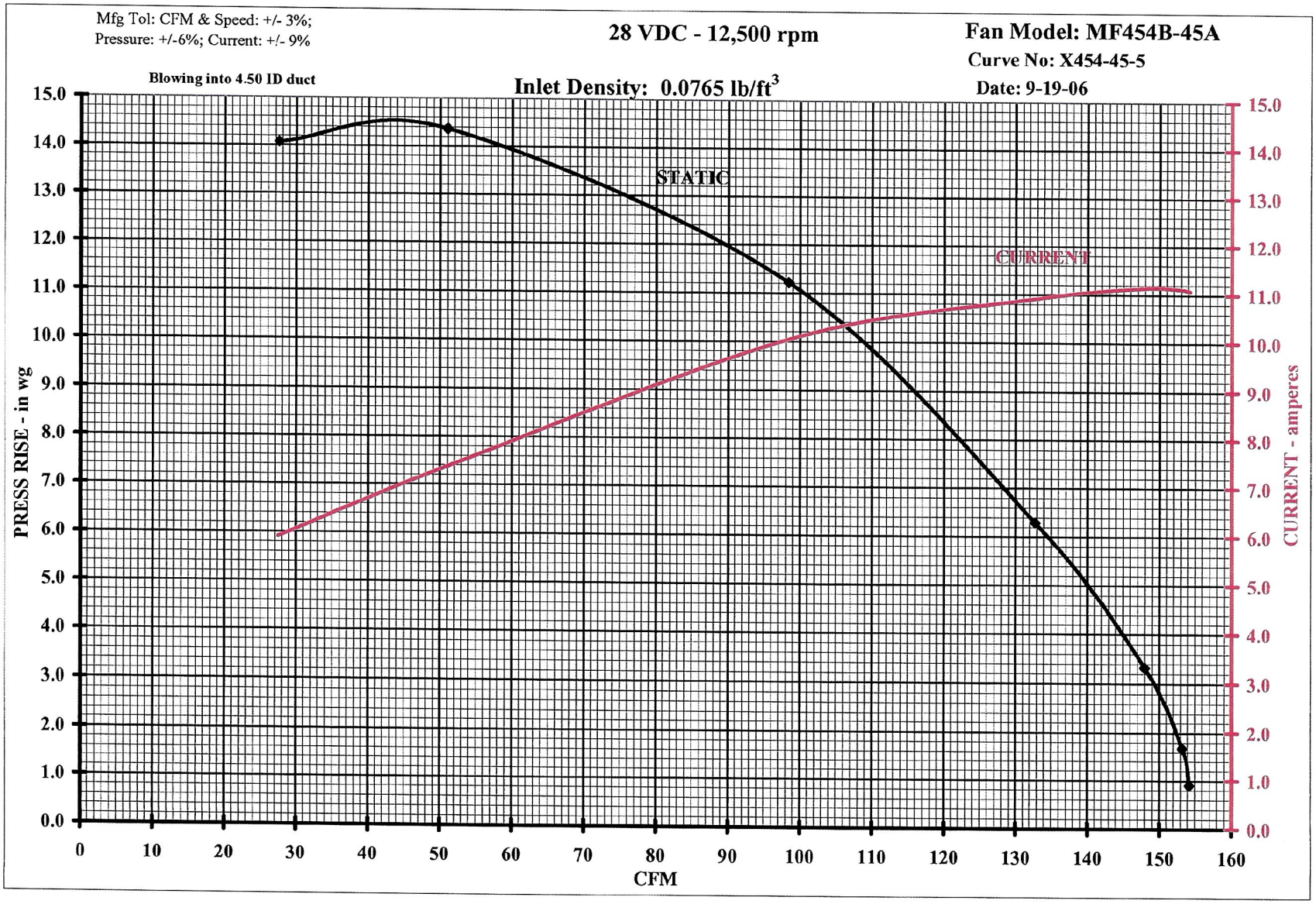
Mfg Tol: CFM & Speed: +/- 3%;
Pressure: +/-6%; Current: +/- 9%
28 VDC - 12,500 rpm
Fan Model: MF454B-45A
Curve No: X454-45-5
Date: 9-19-06
Blowing into 4.50 ID duct
Inlet Density: 0.0765 lb/ft3
STATIC
CURRENT
PRESS RISE - in wg
CURRENT - amperes
CFM
0.0
1.0
2.0
3.0
4.0
5.0
6.0
7.0
8.0
9.0
10.0
11.0
12.0
13.0
14.0
15.0
0
10
20
30
40
50
60
70
80
90
100
110
120
130
140
150
160